MightyboyEV Additional Wiring
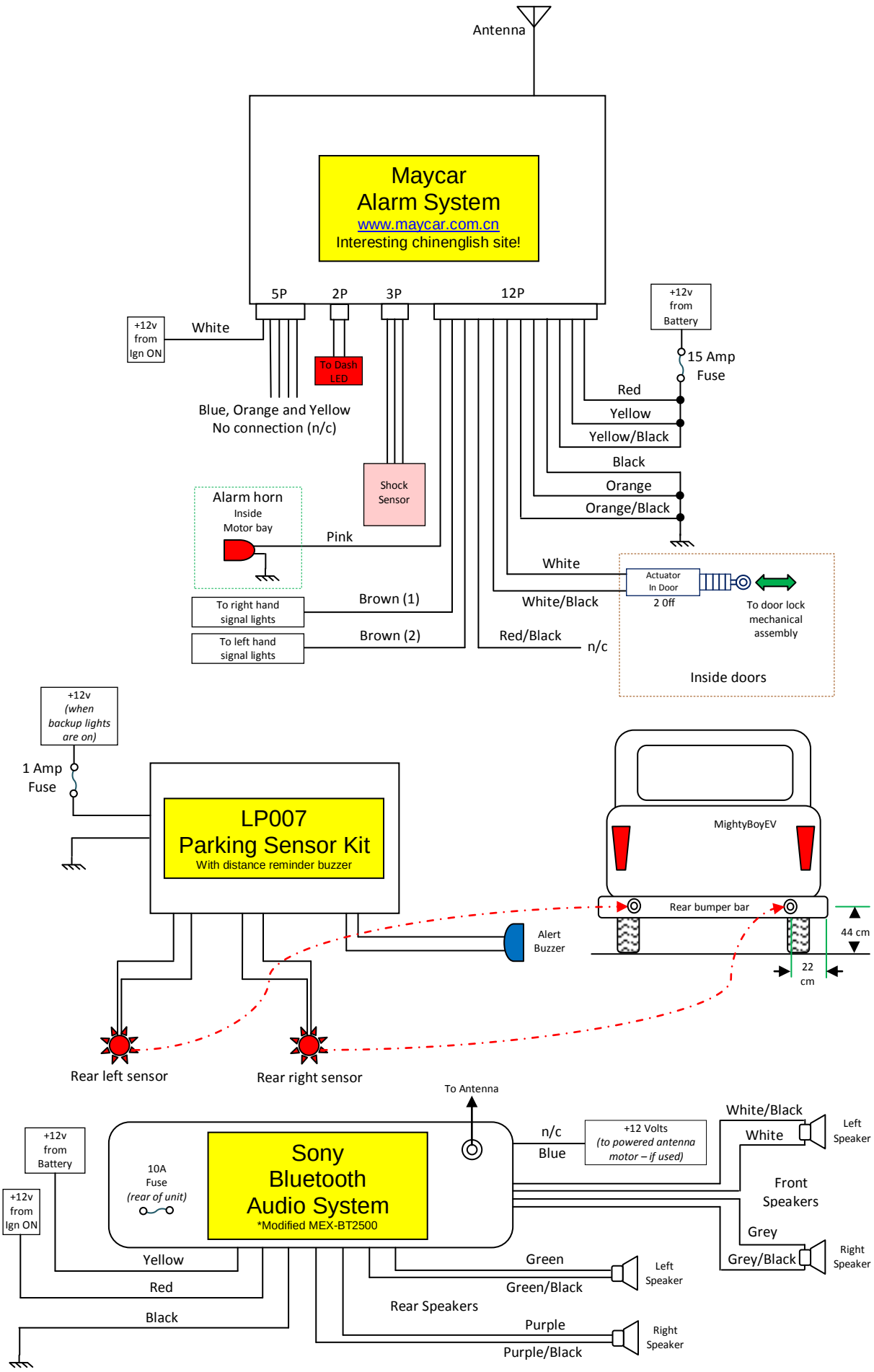
Version 1.01 March 2009 - B White